OPTIMUM®
MASCHINEN - GERMANY

Data sheet

Three cylinder round bending machine

BM3

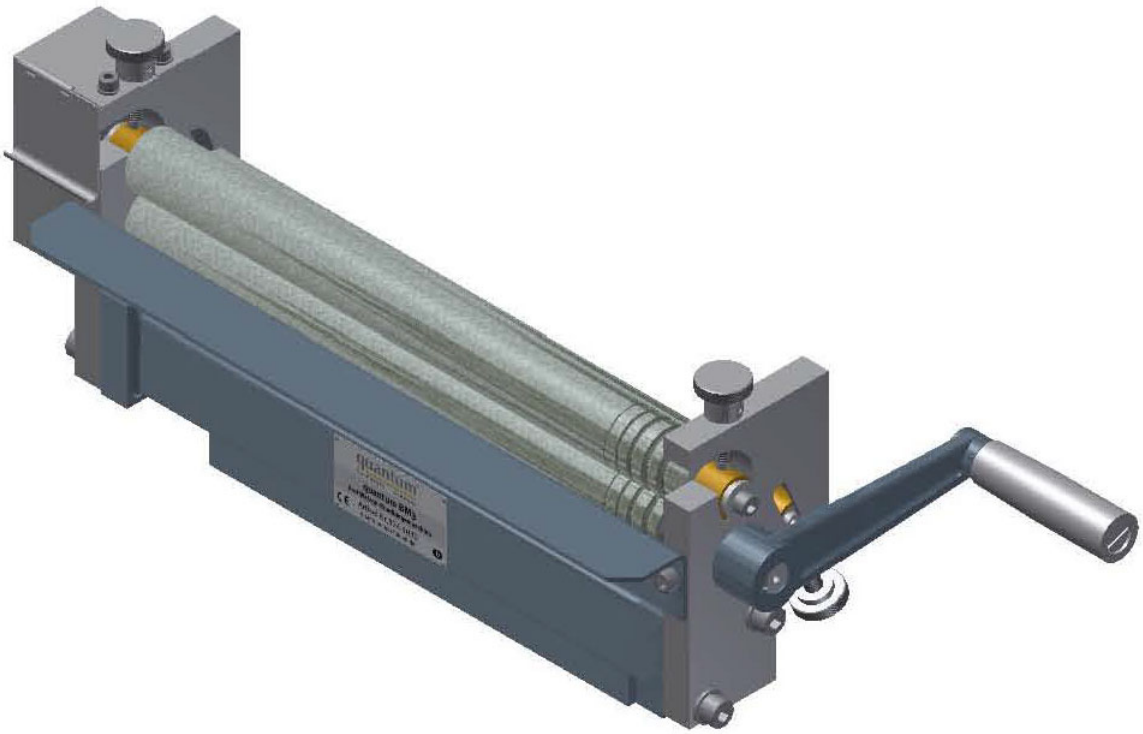

Technical data

Max. material width 310 mm
min. bending Ø 35 mm
unbegrenzt
max. bending Ø unlimited
Weight 10 kg
max. rolling thicknesses
Steel sheet metal St. 37 - 1mm
Stainless steel - 1mm
Aluminium / Copper - 2mm
Brass - 1mm
Gold/Silver/Tin plate - 2mm
Small widths - 3mm
Round material - 1 to 5 mm
Rolling rollers - Ø - 30mm

The bending machine is clamped in a vise.

Wear protective gloves when you handle sharp-edged parts.

The bending machine is not a machine within the meaning of the Machinery Directive. The drive takes place with your own hands.

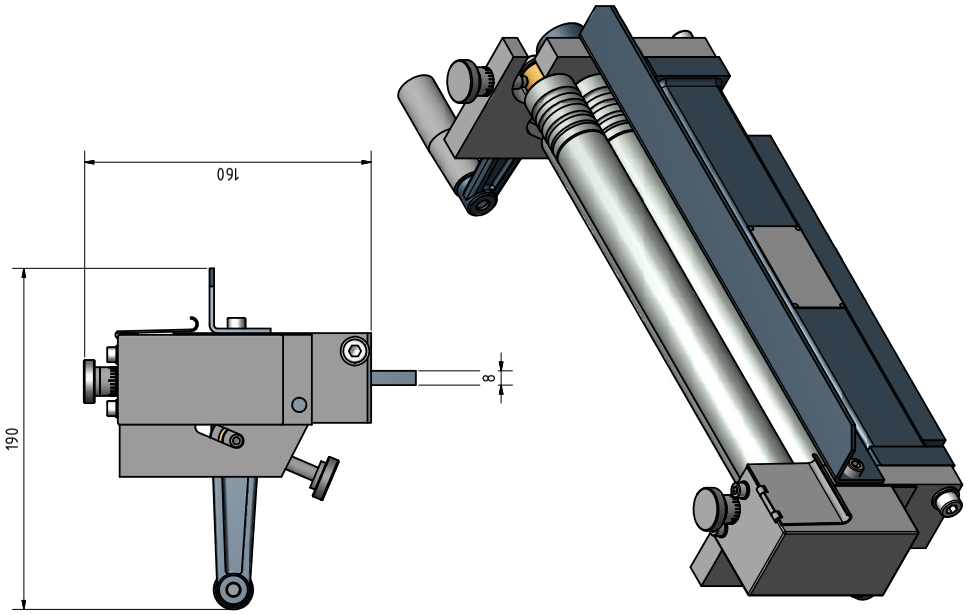
190
160
8

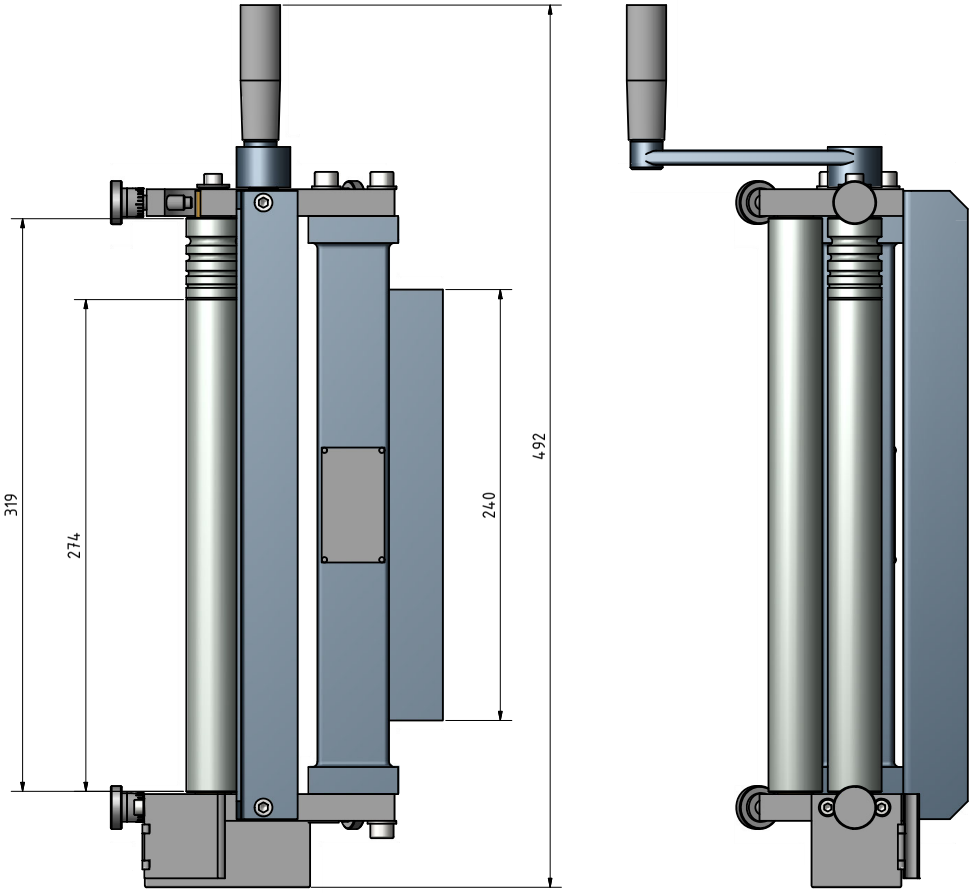
319
274
240
492

Ersatzteile - Spare parts - BM 3

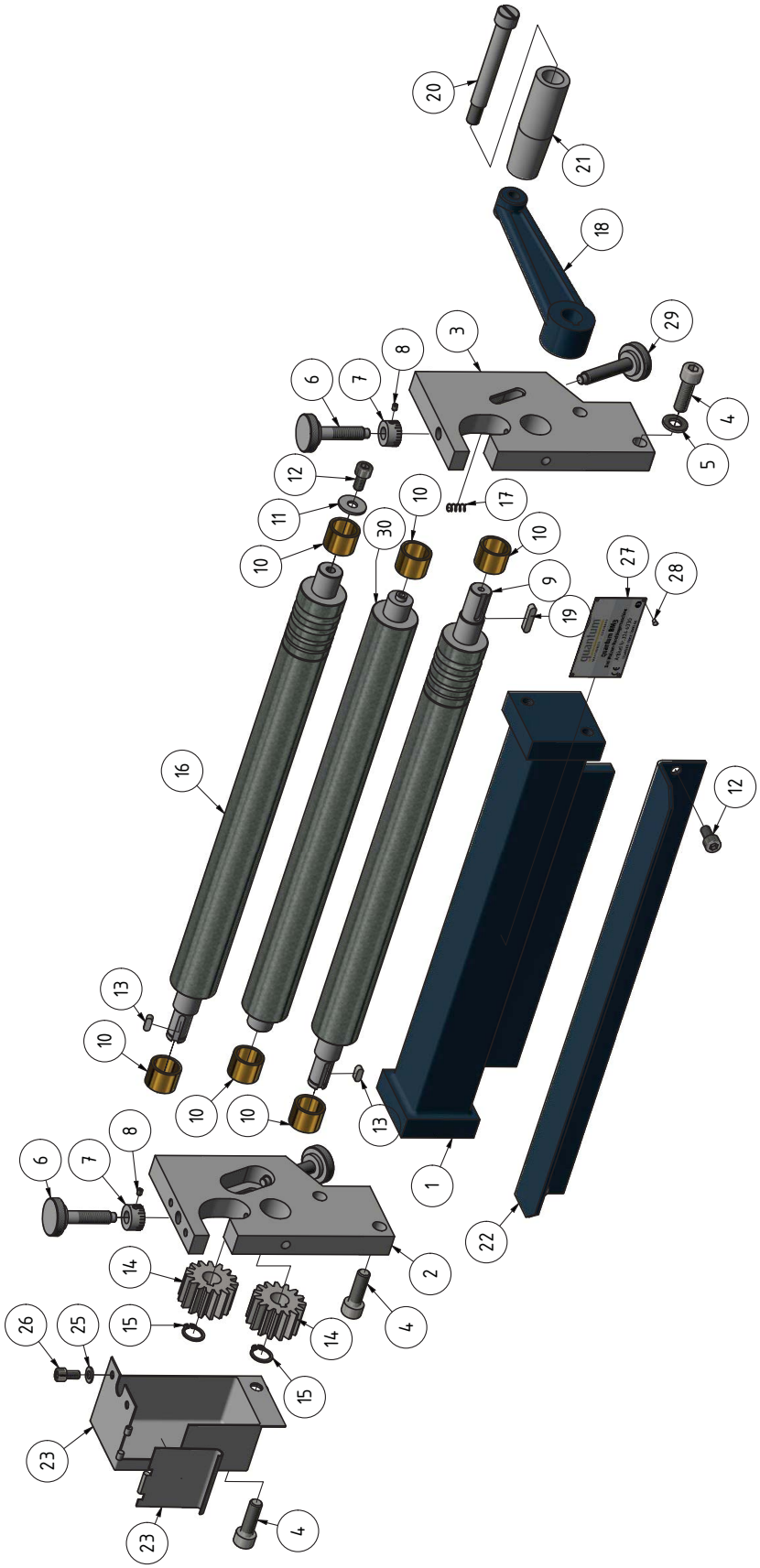

Ersatzteilliste - Spare part list

Pos.	Bezeichnung	Designation	Menge Qty.	Grösse Size	Artikelnummer Item no.
1	Verbindungsbügel	Bracket	1		0324403001
2	Halter links	Holder left	1		
3	Halter rechts	Holder right	1		0324403003
4	Innensechskantschraube	Hexagon socket screw	4	ISO 4762 - M8 x 25	
5	Scheibe	Washer	4	DIN 125 - A 8,4	
6	Stellschraube	Adjusting screw	4		0324403006
7	Skalenring	Scale ring	2		0324403007
8	Gewindestift	Grub screw	2	ISO 4766 - M3 x 4	
9	Untere Rollwalze	Below roll	2		0324403009
10	Messinghülse	Brass bushing	6		0324403010
11	Scheibe	Washer	1		
12	Innensechskantschraube	Hexagon socket screw	3	ISO 4762 - M6 x 12	
13	Passfeder	Fitting key	2	DIN 6885 - A 4 x 4 x 10	042P4410
14	Zahnrad	Gear	2		0324403014
15	Sicherungsring	Retaining ring	2	DIN 471 - 12x1	
16	Obere Rollwalze	Top roll	1		0324403016
17	Feder	Spring	2		0324403017
18	Kurbel	Crank	1		0324403018
19	Passfeder	Fitting key	1	DIN 6885 - A 4 x 4 x 20	042P4420
20	Schraube	Screw	1		0324403020
21	Kurbelgriff	Crank grip	1		0324403021
22	Auflageblech	Support plate	1		0324403022
23	Blechgehäuse	Sheet metal casing	1		0324403023
25	Scheibe	Washer	2	DIN 125 - A 5,3	
26	Innensechskantschraube	Hexagon socket screw	2	ISO 4762 - M5 x 10	
27	Label	Label	1		
28	Niet	Rivet	4		
29	Stellschraube Biegeradius	Adjusting screw bending radius	2		0324403029
30	Umlenkwalze	Guide roll	1		